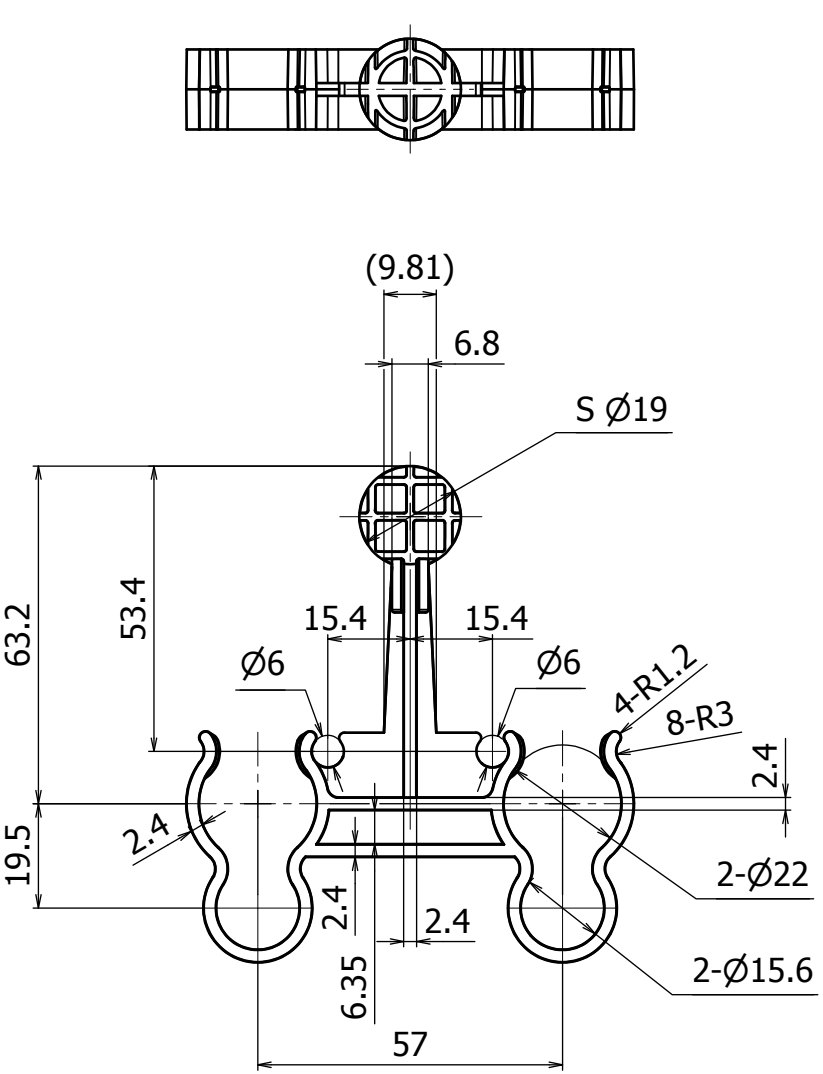

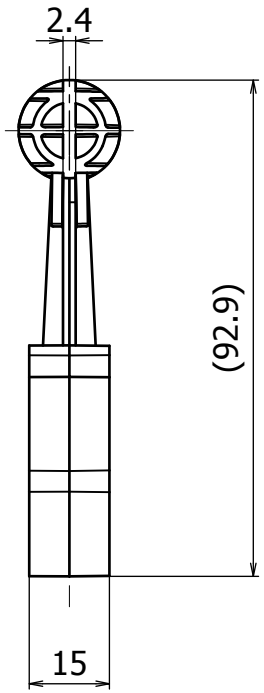

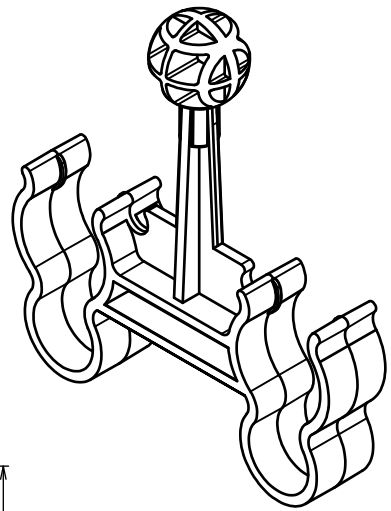

Part Name: Hanger
Part Number: SYC-OK030
Material: PBT(G30%)
Color: Black