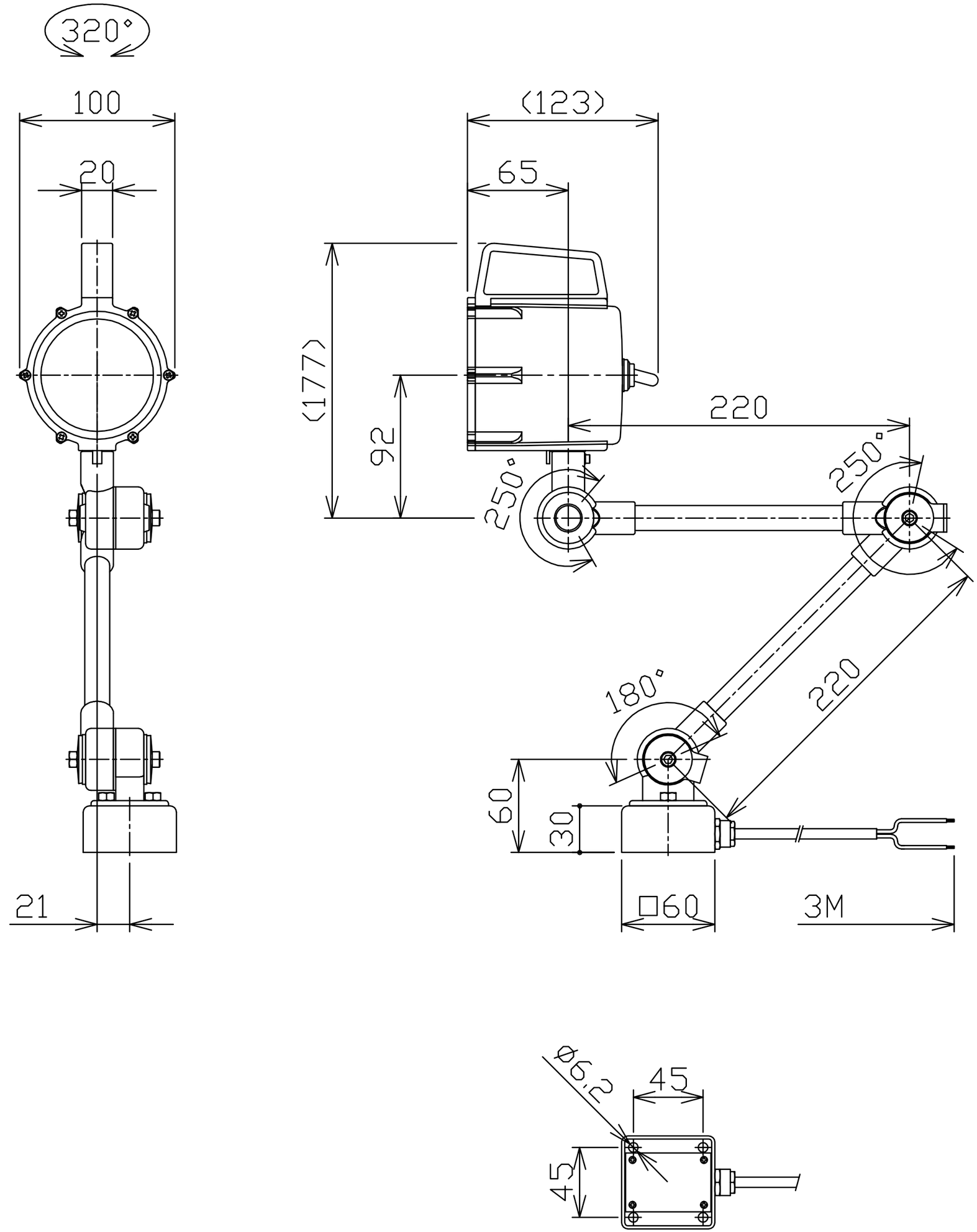
320°
100
20
21
(123)
65
(177)
92
220
250°
250°
180°
220
60
30
□60
3M
Ø6.2
45
45