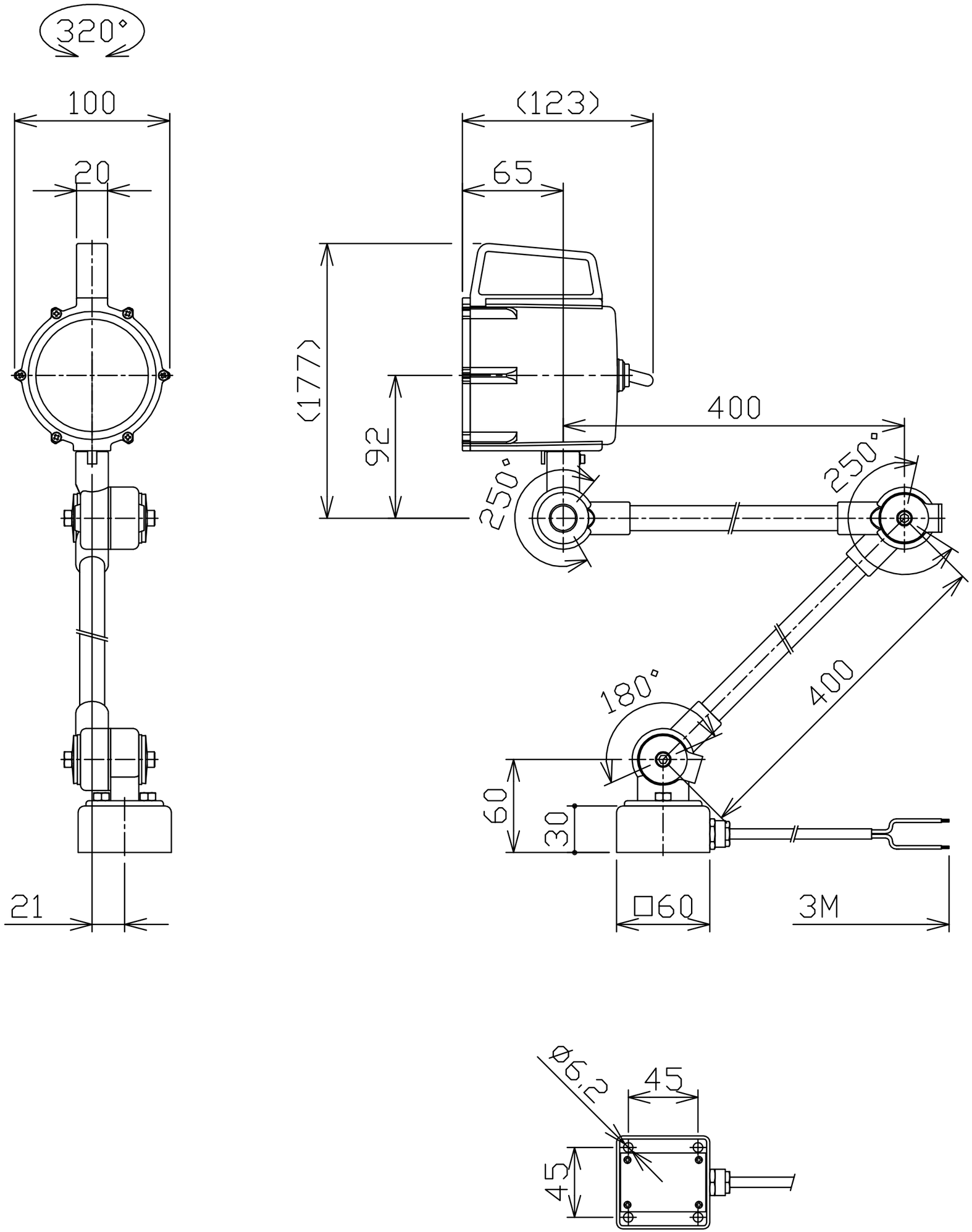
320°
100
20
21
(123)
65
(177)
92
400
250°
250°
180°
400
60
30
□60
3M
φ6.2
45
45