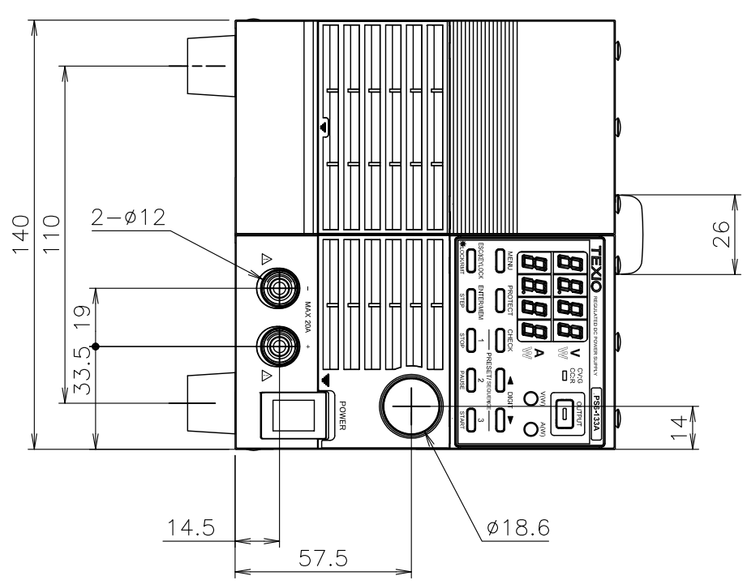

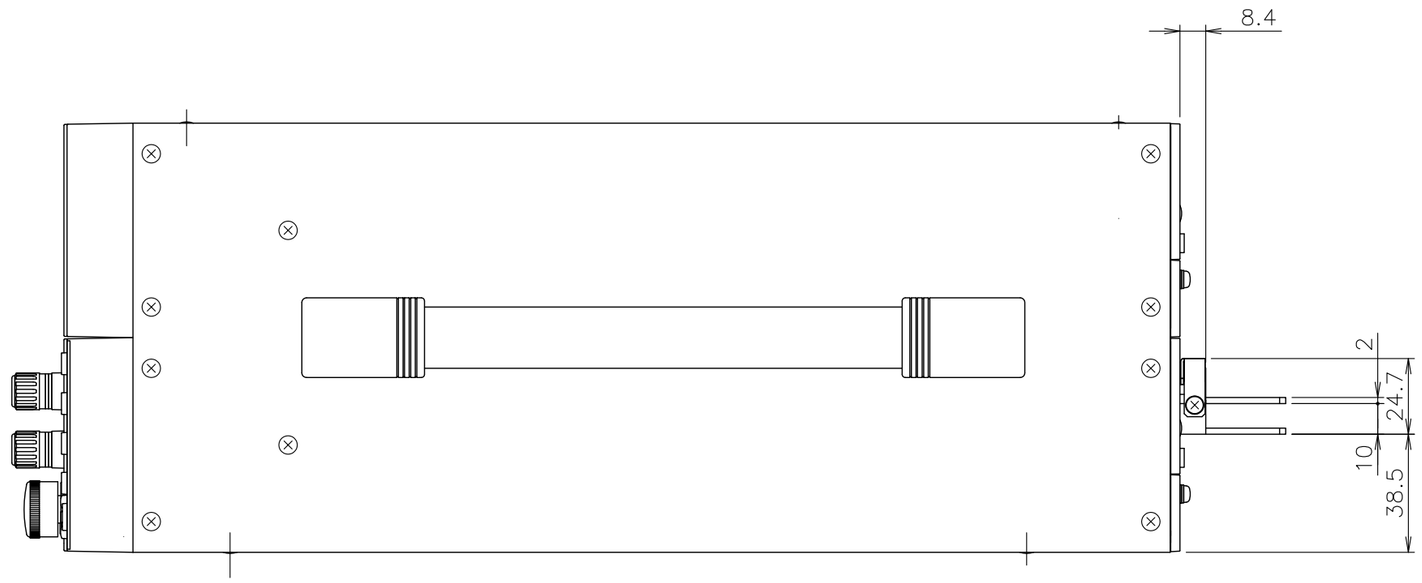

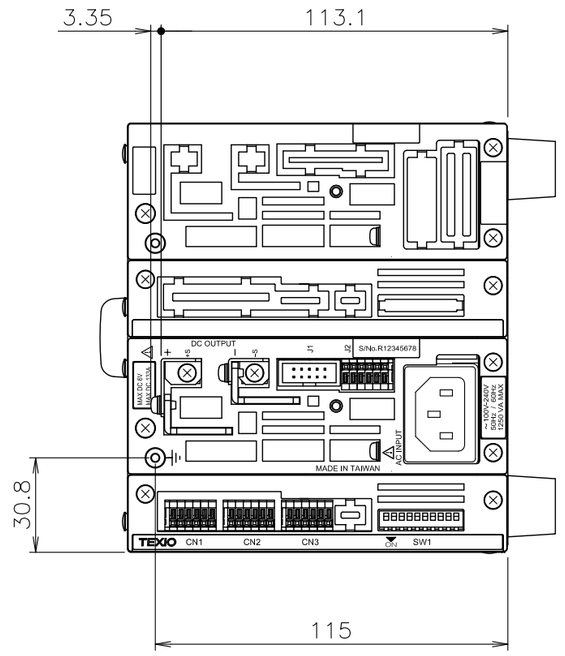

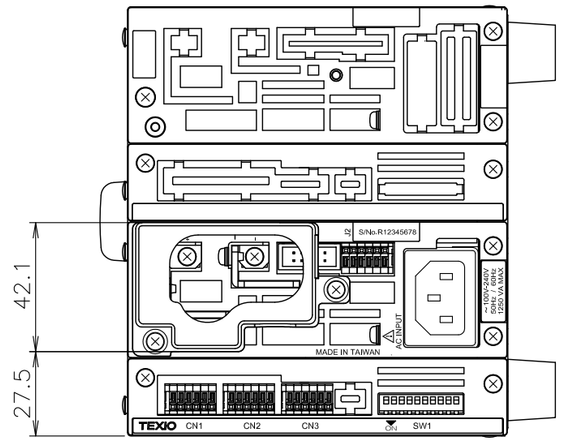

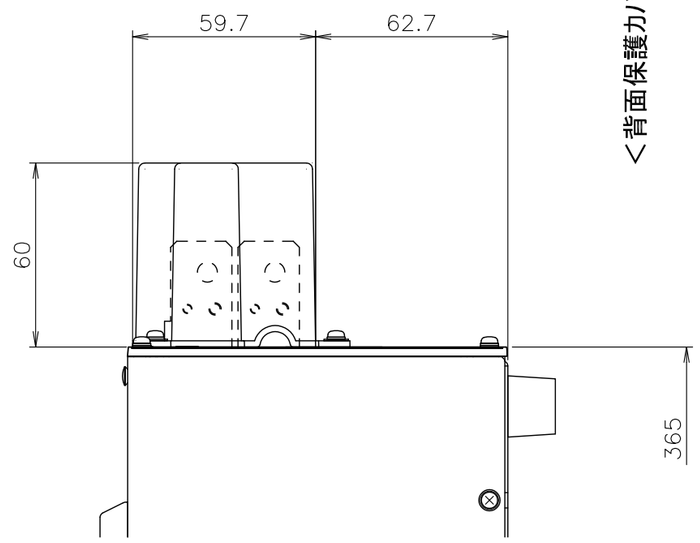

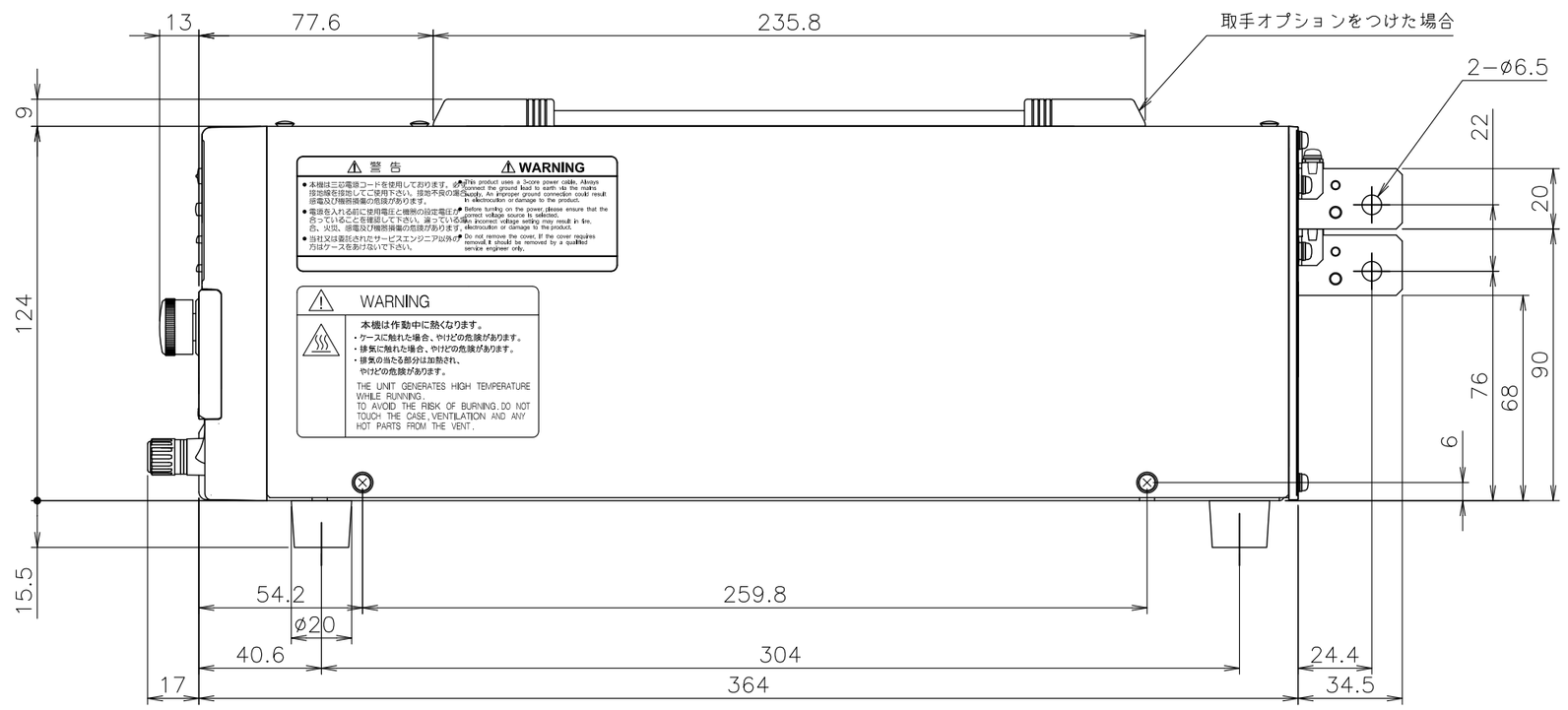

<背面保護カバー取付時寸法>

SCALE 1:2	–	–	–	–	–	X
	NO.	NAME	MATERIAL	FINISH	NOTE	QTY.

DATE 2019−08−28	DESIGNED	CHECKED	APPROVED	PART NAME PS6−133A PS10−80A PS20−40A PS40−20A PS60−13.3A	
UNIT : mm	O.TAKADA				
JIS Z8310−84				PART NO. –	SHEET NO. 1/1 REL. 00

SYMBOL	REVISION NO.	CORD	ISSUED	DATE
⚠1 X		0		